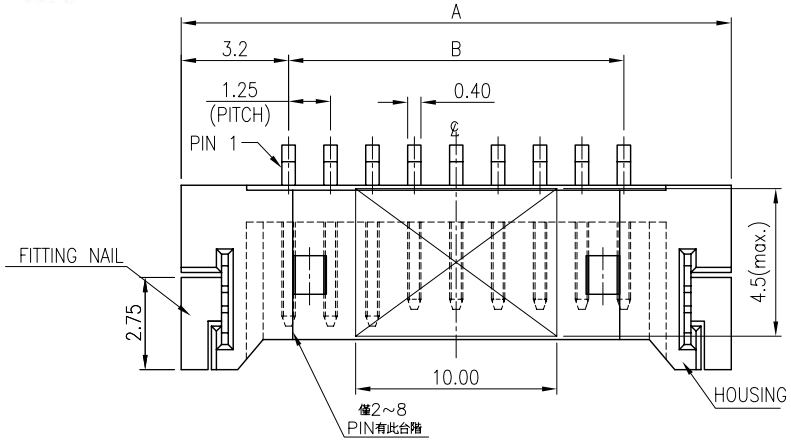

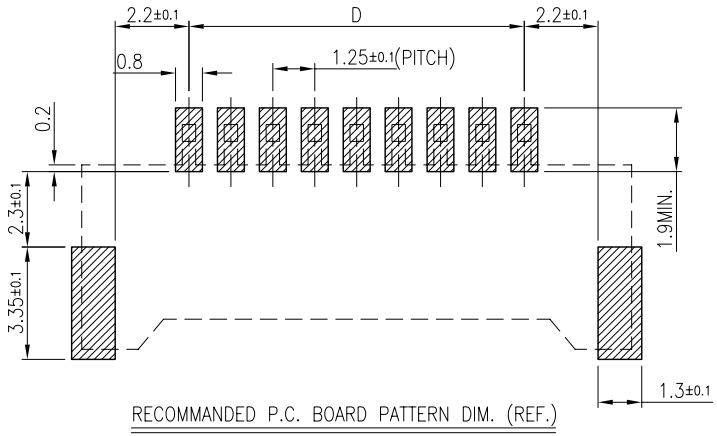

RECOMMANDED P.C. BOARD PATTERN DIM. (REF.)

NOTES:
1. MATERIAL:
   1.1 HOUSING: HALOGEN FREE PLASTIC,UL94V-0.
   1.2 CONTACT: COPPER ALLOY
   1.3 FITTING NAIL: COPPER ALLOY
2. FINISH:
   2.1 CONTACT:
      50u"MIN NICKEL UNDER PLATING OVER ALL
      1: GOLD FLASH ON CONTACT AREA
   2.2 SOLDER:
      50u"MIN NICKEL UNDER PLATING OVER ALL
      1: GOLD FLASH ON SOLDER AREA
   2.3 FITTING NAIL:
      50u"MIN NICKEL UNDER PLATING OVER ALL
      N: 120u" MIN MATT TIN ON FITTING NAIL
3. REFLOW SOLDER CAPABLE TO 260°C
   PER ACES SPEC.
4. SPEC. PLS. REFER TO PS-51278-xxxxx-xxx
5. PACKAGE PLS. REFER TO 88230-XX0X-TRP
6. PART NUMBER
   51278-XXX X X-XXX

NO OF CKT

PACKING
4:TAPE&REEL WITH MYLAR
0:TAPE&REEL

PLATING
1:GOLD FLASH

XXX	COLOR
001	BLACK

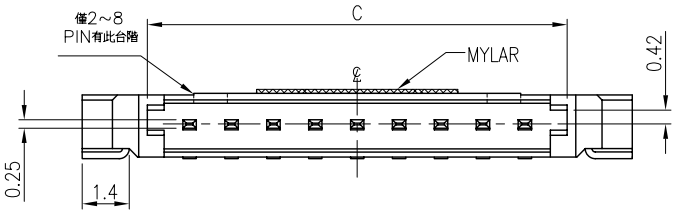

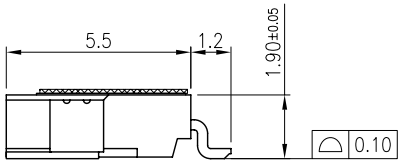

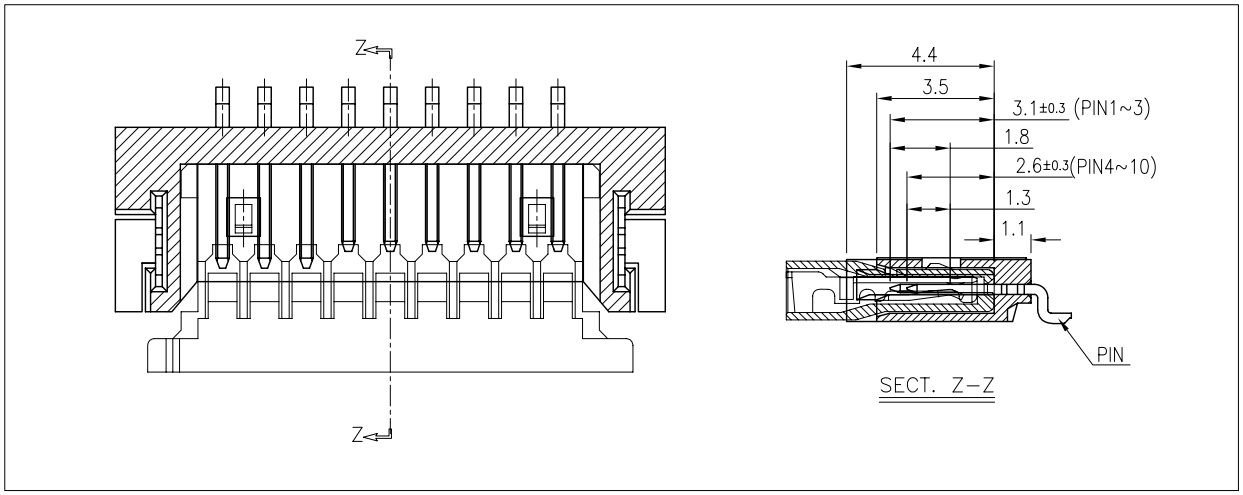

SECT. Z-Z

CKT.	DIM A	DIM B	DIM C	DIM D	M/s W
8	15.15	8.75	11.27	8.75	WAT12
9	16.40	10.00	12.52	10.00	WAT12
10	17.65	11.25	13.77	11.25	N/A

一般公差
TOLERANCES
X. ±0.5 .XX ±0.15
.X ±0.25 .XXX ±0.1
ANGLES ±2°

宏致電子股份有限公司
Aces Electronics Co.,Ltd.

檢驗尺寸標示
SYMBOLS ◎ Ⓜ INDICATE CLASSIFICATION DIMENSION
◎ MARK IS CRITICAL DIM.
Ⓜ MARK IS MAJOR DIM.

品名 (TITLE)
1.25mm WIRE TO BOARD WAFER LPF-2 SMT R/A TYPE

圖號 (DWG NO.)
51278-XXXXX-XXX

製圖 (DR) ZHUWEI 14/09/09
審核 (CHKD) DAVID
核准 (APPD) FRANK

表面處理 (FINISH)
比例 (SCALE) 1:1
單位 (UNITS) mm
張數 (SHEET) 1 OF 2
SIZE A4
REV B

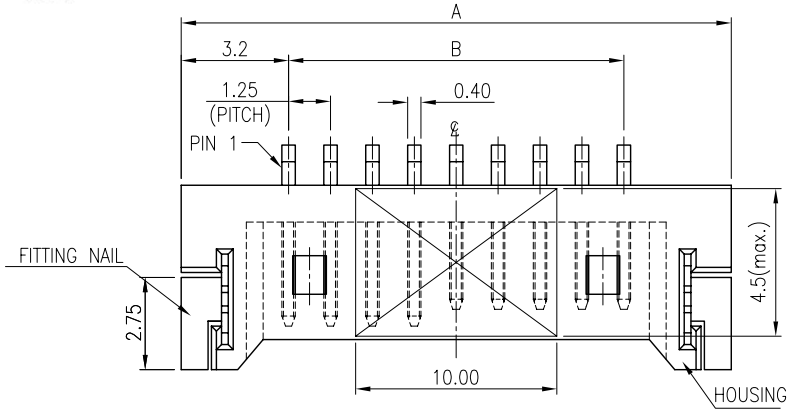

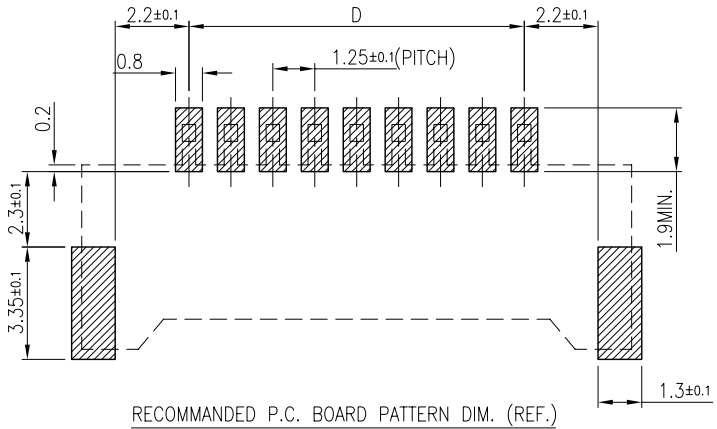

RECOMMANDED P.C. BOARD PATTERN DIM. (REF.)

NOTES:
1. MATERIAL:
   1.1 HOUSING: HALOGEN FREE PLASTIC,UL94V-0.
   1.2 CONTACT: COPPER ALLOY
   1.3 FITTING NAIL: COPPER ALLOY
2. FINISH:
   2.1 CONTACT:
      50u"MIN NICKEL UNDER PLATING OVER ALL
      1: GOLD FLASH ON CONTACT AREA
   2.2 SOLDER:
      50u"MIN NICKEL UNDER PLATING OVER ALL
      1: GOLD FLASH ON SOLDER AREA
   2.3 FITTING NAIL:
      50u"MIN NICKEL UNDER PLATING OVER ALL
      N: 120u" MIN MATT TIN ON FITTING NAIL
3. REFLOW SOLDER CAPABLE TO 260°C
   PER ACES SPEC.
4. SPEC. PLS. REFER TO PS-51278-xxxxx-xxx
5. PACKAGE PLS. REFER TO 88230-XX0X-TRP
6. PART NUMBER

51278-XXX X X-XXX

NO OF CKT

PACKING
4:TAPE&REEL WITH MYLAR
0:TAPE&REEL

PLATING
1:GOLD FLASH

XXX	COLOR
001	BLACK

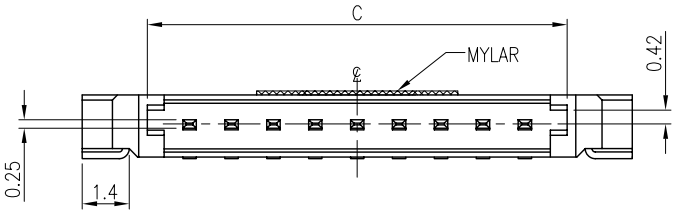

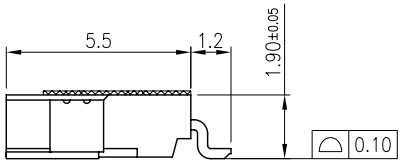

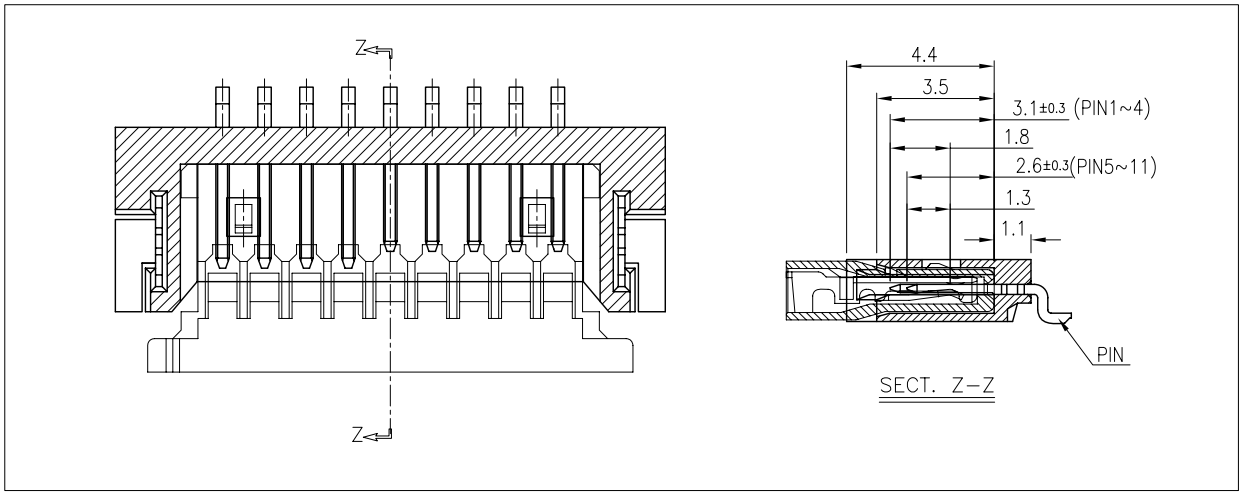

SECT. Z-Z

CKT.	DIM A	DIM B	DIM C	DIM D	M/s W
11	18.90	12.50	15.02	12.50	N/A

一般公差
TOLERANCES
X. ±0.5 .XX ±0.15
.X ±0.25 .XXX ±0.1
ANGLES ±2°

宏致電子股份有限公司
Aces Electronics Co.,Ltd.

檢驗尺寸標示
SYMBOLS ◎ Ⓜ INDICATE CLASSIFICATION DIMENSION
◎ MARK IS CRITICAL DIM.
Ⓜ MARK IS MAJOR DIM.

品名 (TITLE)
1.25mm WIRE TO BOARD WAFER LPF-2 SMT R/A TYPE

圖號 (DWG NO.)
51278-XXXXX-XXX

製圖 (DR) 14/09/09 ZHUWEI
審核 (CHKD) DAVID
核准 (APPD) FRANK

表面處理 (FINISH) ———
比例 (SCALE) 1:1
單位 (UNITS) mm
張數 (SHEET) 2 OF 2
SIZE A4
REV B